Name: ____________________
per. _____

Transcribe this Gene into mRNA:

TAC TAG GGC CTG CCA ATA ATG GCA ACG TGA CAT GAG

Complete each statement.

15. Proteins are made in the cytoplasm of a cell, whereas DNA is found only in the ________________________ .

16. The process of making RNA from DNA is called ________________________ .

17. The process of transcription is similar to the process of DNA ________________________ .

18. ________________________ carries information from the DNA in the nucleus out into the cytoplasm of the cell.

19. mRNA carries the information for making proteins to the ________________________ .

In your textbook, read about translation from mRNA to protein.

Label the diagram. Use these choices: transfer RNA (tRNA), amino acid, amino acid chain, codon, anticodon, messenger RNA (mRNA), ribosome.

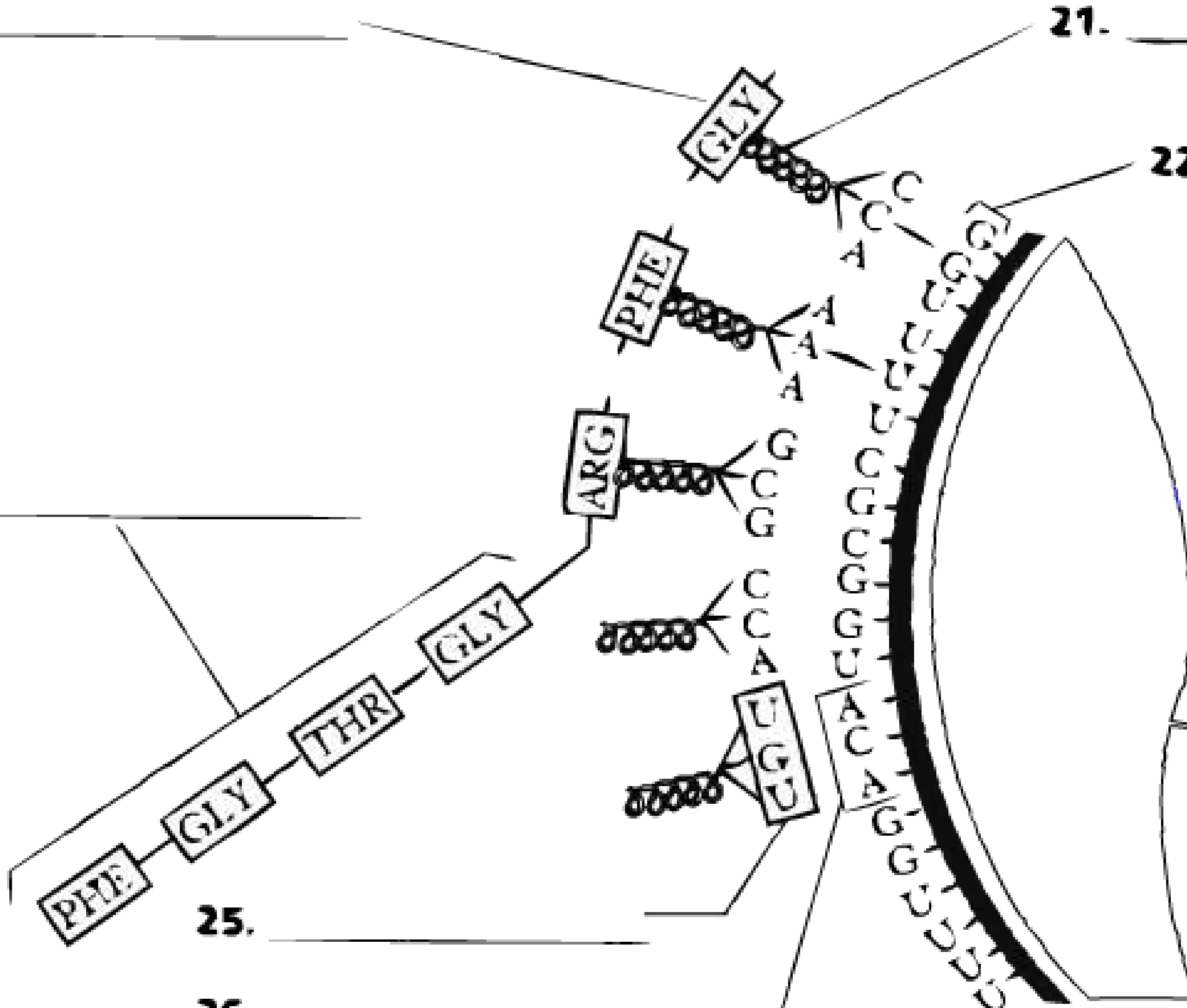

20. ________________________

21. ________________________

22. ________________________

23. ________________________

24. ________________________

25. ________________________

26. ________________________